REL NO	LTR	NO	REVISION	ZONE	DWN	CKD	APVD	DATE
FRD22626	D	2	ADD SHEET 4	-	NDM	YSJ	HLS	03-08-06
FRD31055	E	-	----------	-	MI	PL	P_LARSON	02-16-07

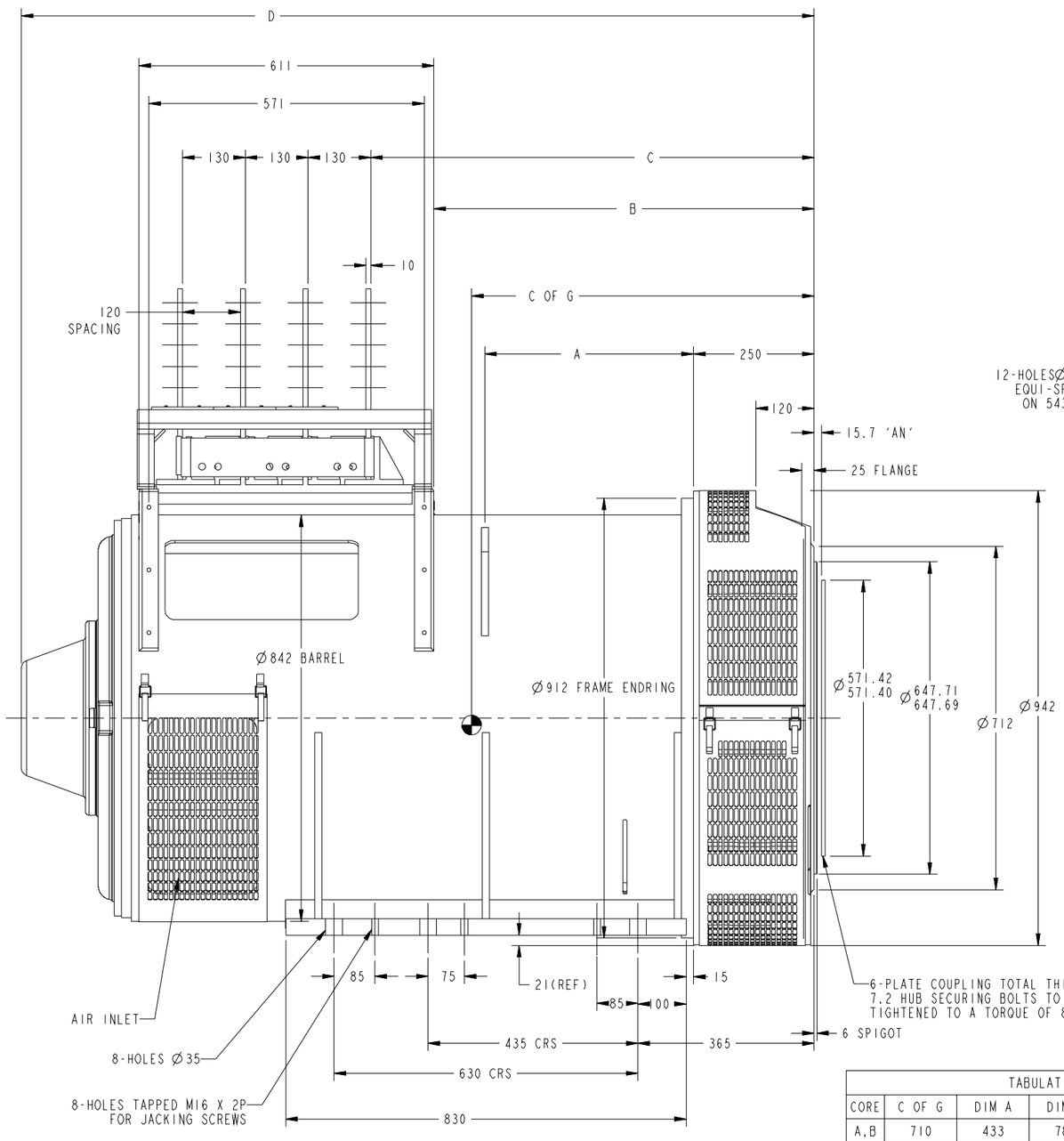

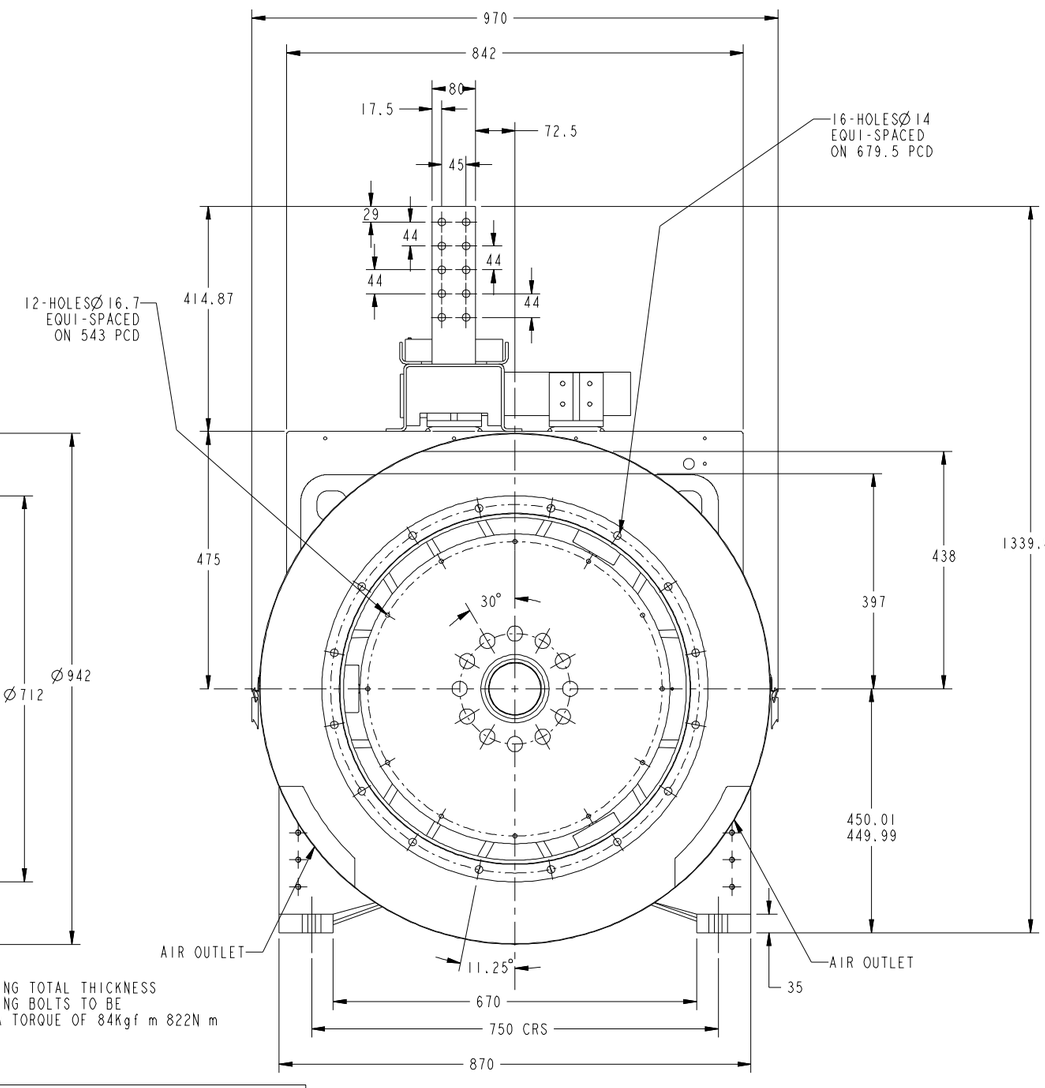

TABULATION

CORE	C OF G	DIM A	DIM B	DIM C	DIM D
A,B	710	433	788	919	1643
C	750	433	788	919	1643
D	760	485	938	1069	1793
E	800	485	938	1069	1793
F	825	593	1023	1154	1878

QTY	ITEM	PART NO	DESCRIPTION OR MATERIAL

UNLESS OTHERWISE SPECIFIED, ALL DIMENSIONS ARE IN MILLIMETERS

DIM: X ± 1; .X ± 0.1; .XX ± 0.01

HOLE: 0.00- 4.99 +0.15/-0.08; 5.00- 9.99 +0.20/-0.10; 10.00-17.49 +0.25/-0.13; 17.50-24.99 +0.30/-0.13

ANG TOL: ± 0.5° SCALE: 1/1

SIM TO

DO NOT SCALE PRINT

- CONFIDENTIAL -
PROPERTY OF CUMMINS POWER GENERATION GROUP

FOR INTERPRETATION OF DIMENSIONING AND TOLERANCING, SEE ASME Y14.5M-1994

FIRST USED ON DFLB,LC,LE

DWN D_CRANE
CKD E_CZECHOWSKI
APVD E_CZECHOWSKI
DATE 11-12-03

SITE CODE PGF

CUMMINS POWER GENERATION
1400 73RD AVENUE NE, MINNEAPOLIS, MN 55432

GENERATOR_ASSY.

DWG SIZE D — 0200_3128 — SHEET 4 of 4 — DWG REV E

Pro/ENGINEER